REVISION HISTORY			
REV	DATE	BY	DESCRIPTION
E	27MAR2020	ZAA/MMM	PRN: P2019-3126

LOWER ARM PIVOT ±95°

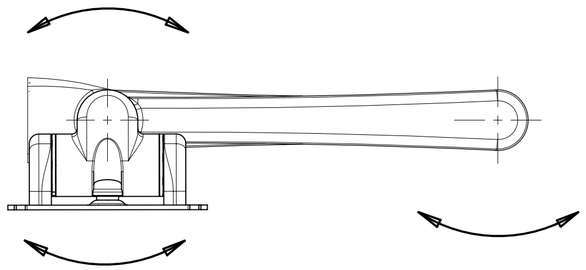

DISPLAY SWIVEL
-5° COUNTERCLOCKWISE
+185° CLOCKWISE

UPPER ARM PIVOT 360°

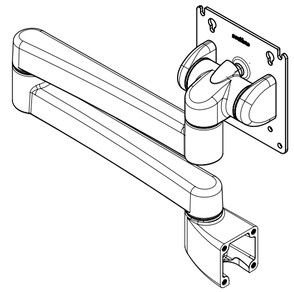

VERTICAL MOUNT
(WITH WIRE NOTCH)

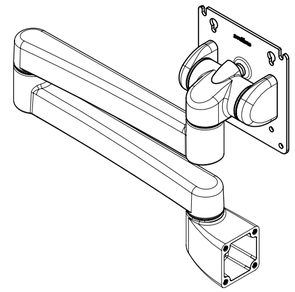

VERTICAL MOUNT
(WITHOUT WIRE NOTCH)

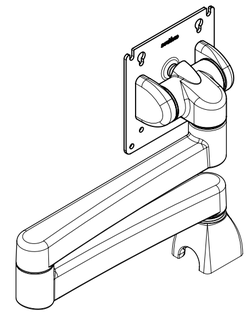

HORIZONTAL MOUNT
(WITH WIRE NOTCH)

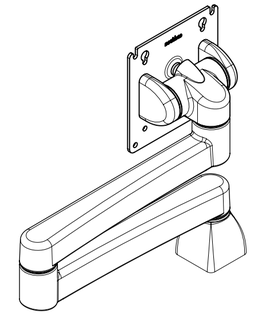

HORIZONTAL MOUNT
(WITHOUT WIRE NOTCH)

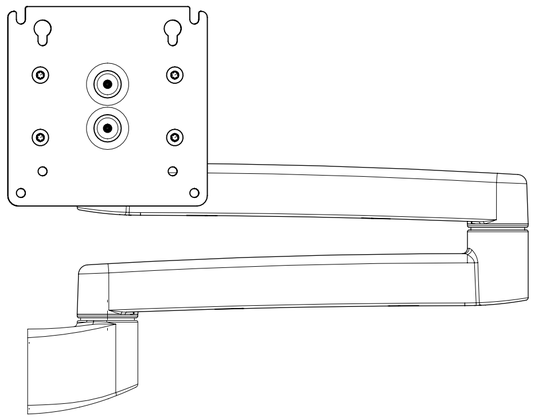

FORWARD (-)

TILT ±20°

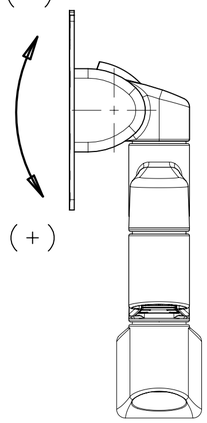

REVERSE (+)

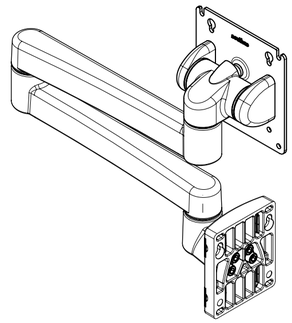

FRONT MOUNT

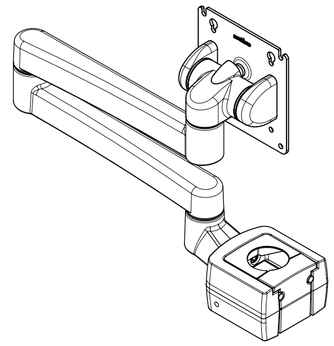

POLE MOUNT

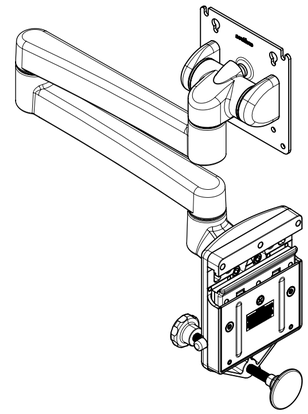

DIN RAIL MOUNT

SOUTHCO PERFORMANCE GUIDELINES:
THE PERFORMANCE GUIDLINES SHOWN ON THIS PAGE ARE SUPPLIED AS A GENERAL GUIDE ONLY, AS CONDITIONS VARY WITH EACH APPLICATION AND METHOD OF INSTALLATION, STRENGTH DATA GIVEN IS FOR FAILURE OF PRODUCT OR FOR SUFFICIENT DEFORMATION TO MAKE THE PRODUCT INOPERABLE. NO SAFETY FACTOR HAS BEEN APPLIED. IT IS RECOMMENDED THAT THE USER REQUEST A PRODUCT SAMPLE TOR TESTING TO DETERMINE THE SUITABILITY OF THE PRODUCT FOR THE PURPOSE INTENDED AND USER'S PARTICULAR APPLICATION.

MOUNT STYLE	PART NUMBER (SEE NOTES)	DISPLAY TILT REVERSE TORQUE <1,2> N*m (lbf*in) ±20%	DISPLAY TILT FORWARD TORQUE N*m (lbf*in) REFERENCE <1,2>	DISPLAY SWIVEL TORQUE <2>	UPPER ARM PIVOT TORQUE AT MIDDLE JOINT <2>	LOWER ARM PIVOT TORQUE AT MOUNT <2>	WORKING LOAD RATING PER UL 1678 N (lbm) <2>	AVERAGE ULTIMATE LOAD N (lbm) <2,3,4>	SWIVEL AND PIVOT STOP ULTIMATE TORQUE <2> N*m (lbf*in)	CYCLE LIFE <1,2>
VERTICAL (WITHOUT WIRE NOTCH)	AV-D32-46D101-YY	7.9 (70)	2.2 (19.5)	4.29 N*m (38 lbf*in) NOMINAL / 2.71 N*m (24 lbf*in) MINIMUM	9.8 N*m (87 lbf*in) NOMINAL / 5.08 N*m (45 lbf*in) MINIMUM	9.8 N*m (87 lbf*in) NOMINAL / 5.08 N*m (45 lbf*in) MINIMUM	53.4 (12.1)	756 (170)	11.3 (100)	20,000
	AV-D32-46D102-YY	15.36 (136)	2.26 (20)							
	AV-D32-46D103-YY	8.58 (76)	6.01 (53.2)							
VERTICAL (WITH WIRE NOTCH)	AV-D32-46D111-YY	7.9 (70)	2.2 (19.5)							
	AV-D32-46D112-YY	15.36 (136)	2.26 (20)							
	AV-D32-46D113-YY	8.58 (76)	6.01 (53.2)							
HORIZONTAL (WITHOUT WIRE NOTCH)	AV-D32-46D121-YY	7.9 (70)	2.2 (19.5)							
	AV-D32-46D122-YY	15.36 (136)	2.26 (20)							
	AV-D32-46D123-YY	8.58 (76)	6.01 (53.2)							
HORIZONTAL (WITH WIRE NOTCH)	AV-D32-46D131-YY	7.9 (70)	2.2 (19.5)							
	AV-D32-46D132-YY	15.36 (136)	2.26 (20)							
	AV-D32-46D133-YY	8.58 (76)	6.01 (53.2)							
FRONT	AV-D32-46D141-YY	7.9 (70)	2.2 (19.5)							
	AV-D32-46D142-YY	15.36 (136)	2.26 (20)							
	AV-D32-46D143-YY	8.58 (76)	6.01 (53.2)							
POLE	AV-D32-46D161-YY	7.9 (70)	2.2 (19.5)							
	AV-D32-46D162-YY	15.36 (136)	2.26 (20)							
	AV-D32-46D163-YY	8.58 (76)	6.01 (53.2)							
RAIL	AV-D32-46D171-YY	7.9 (70)	2.2 (19.5)							
	AV-D32-46D172-YY	15.36 (136)	2.26 (20)							
	AV-D32-46D173-YY	8.58 (76)	6.01 (53.2)							

NOTES:

1. TEST DATA FROM THE FOLLOWING SOUTHCO TEST REPORTS:
   <1> TRAV-9190
   <2> TRAV-18175
   <3> TRAV-38367
   <4> TRAV-39382
   *ENGINEERING DERIVED VALIE FROM SUPPORTING TEST DOCUMENTS.

2. CYCLE AND LOAD TESTS WERE CONDUCTED WITH WALL (VERTICAL PLANE) MOUNT VERSIONS. ULTIMATE LOAD TEST WAS CONDUCTED WITH THE DISPLAY PARALLEL TO THE MOUNTING PLANE AT THE LARGEST LINEAR DISTANCE.

3. DISPLAY AXIS SYSTEM CYCLE TEST AS INDIVIDUAL MOTION AS FOLLOWS:
   DISPLAY TILT FORWARD 20° AND REVERSE 20°.
   ARM AND DISPLAY SWIVEL/PIVOT SYSTEM CYCLE TEST AS CONTINUOUS MOTION AS FOLLOWS:
   DISPLAY SWIVEL 80°, UPPER ARM PIVOT 80° AND LOWER ARM PIVOT 80° FROM POSITION SHOWN IN A CONTINUOUS LINEAR MOTION.

   CYCLE TESTING CONDUCTED WITH A 5.49 lkg (12.1 lbm) TEST DISPLAY PANEL ATTACHED FOR THE SWIVEL AND PIVOT CYCLE TESTS.

4. TILT TORQUE SPECIFICATION AT A CYCLE LIFE OF 20,000 CYCLES AT 25% DUTY CYCLE AT SPEEDS LESS THAN 15 RPM. TILT CYCLE TEST DATA IS FROM PART NUMBER AV-D32-23A102-50.

   NOTE: TILT FORWARD AND TILT REVERSE TORQUE MEASURED WITH THE DISPLAY IN THE VERTICAL (0°) POSITION. THE TILT TORQUE IN THE FORWARD AND REVERSE DIRECTION VARIES WITH THE COUNTERBALANCE, (WHEN EQUIPPED).

5. PART NUMBERS: YY = 50, 60, 61, 76, 77 OR 78

THIRD ANGLE PROJECTION

MILLIMETERS [IN]

SURFACE AREA

TOLERANCES UNLESS OTHERWISE NOTED

UP TO 0.5	±0.05
OVER 0.5 UP TO 6	±0.1
OVER 6 UP TO 30	±0.2
OVER 30	±0.3
ANGLES	±1°

PER ASME Y14.5M-1994

PROPRIETARY ITEM
EXCEPT FOR USES EXPRESSLY GRANTED IN WRITING, INFORMATION DISCLOSED HEREON IS CONFIDENTIAL AND ALL RIGHTS, PATENT AND OTHERWISE, ARE RESERVED BY SOUTHCO, INC.

southco®
CONNECT·CREATE·INNOVATE

DESCRIPTION: STANDARD DOUBLE ARM ASSEMBLY VERTICAL AND HORIZONTAL MOUNT

SIZE	SYSTEM	DWG NO.
A2	NX	TD-AV-D32-46D1XY-J

DRAWN BY	DATE	SCALE	SHEET
GEA	15SEP2014	1:1	1 OF 1